狮门微
LIONSGATE SEMI

PRODUCT CATALOGUE

功率半导体产品

专注于功率半导体器件的开发应用和智能制造

由于产品的更新迭代，本产品型录的部分参数数据会产生变化，建议您在查阅本产品型录的同时，请联系我们，以便您及时获得最新的资讯。

All technical data, drawings and product information contained here may be subject to change, in order to provide you with a continuously improved products, please contact with us for up to date information.

V:LGS- PC- MKT2410

上海狮门半导体有限公司
www.lionsgateigbt.com

从芯出发
改变世界

目录 CONTENTS

COMPANY
INTRODUCTION
公司简介

LIONSGATE SEMI
上海狮门半导体有限公司

- 成立于**2020**年
- 聚焦于功率半导体的开发应用和智能制造
- 致力于实现对国外高端进口功率模块产品国产化
- 集研发、生产、销售和服务为一体的创新型科技企业
- 产品:各种类规格的工业级和车规级IGBT模块和SiC模块

- Founded in **2020** (referred to as Lionsgate Semi)
- Devoted to realizing the localization of high-end power module products imported from abroad.
- An innovative technology enterprise collects together R&D, manufacturing, sales.
- Focus on R&D, system application and intelligent manufacturing for power semiconductors.
- Various types of IGBT &SiC power modules for industrial grade & automotive-grade.

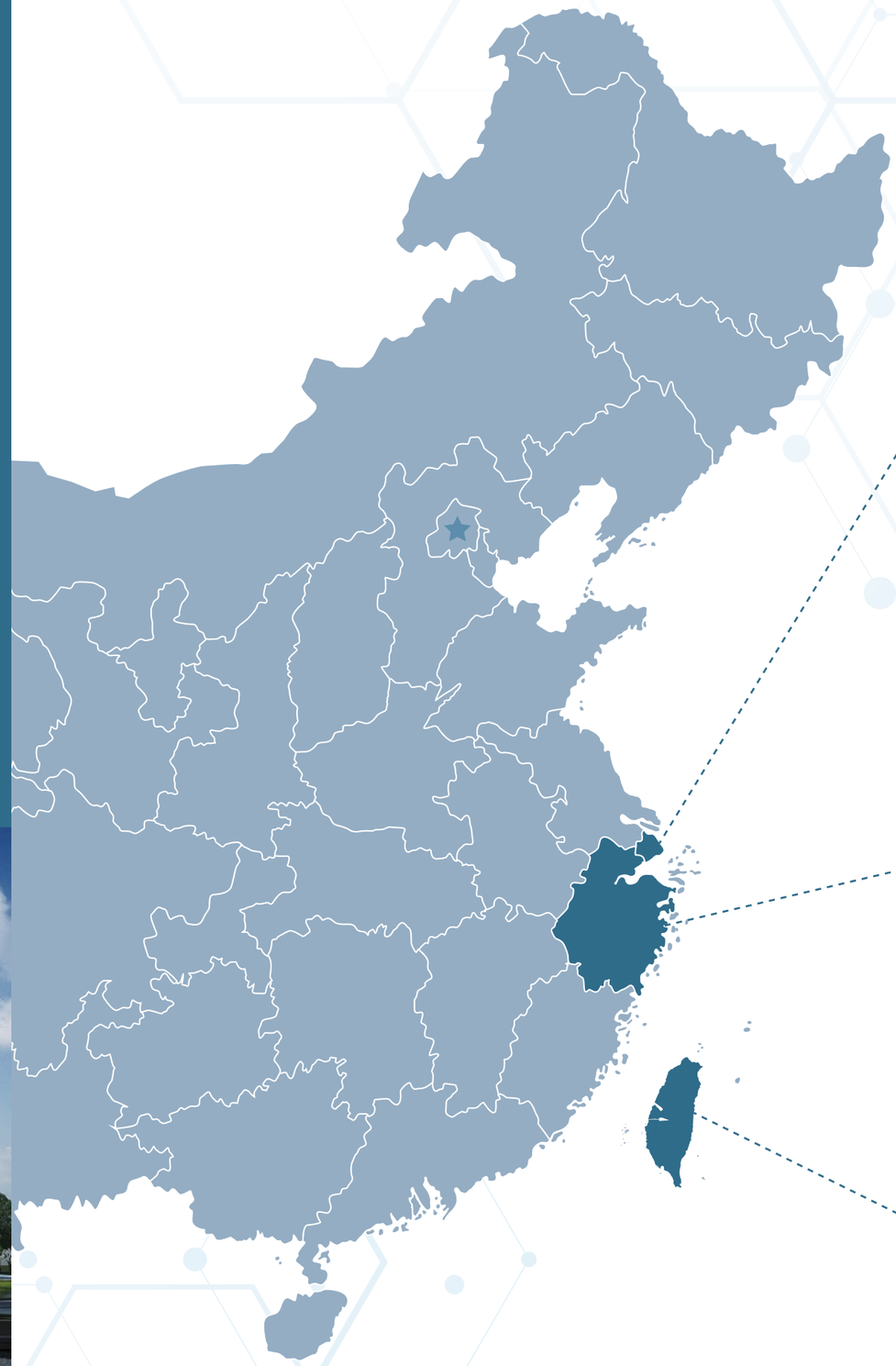

上海基地
Shang Hai HQ

- 研发技术、人才引进
- 实验中心:产品评估
- 运营中心:应用评估
- 制造工厂
  IGBT产量100万颗

- R&D Center
- Advanced Laboratory: product evaluation
- Operation Center: application evaluation
- Manufacture Factory: 2 production lines
  1 million pcs IGBT/ Annual Production

浙江基地
Zheng Jiang Manufacturing Base

- 实验中心
- 制造工厂(共四期)
  IGBT一期产量约325万颗

- Advanced Laboratory
- Manufacture Factory (Phase IV projects)
  325 million pcs IGBT/ Annual Production

台湾研发中心
Tai Wan R&D Center

LIONSGATE SEMI

DEVELOPMENT

HISTORY

发展历程

上海狮门半导体有限公司
Shanghai Lionsgate Semiconductor Co., Ltd.

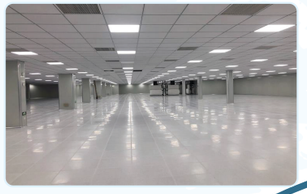

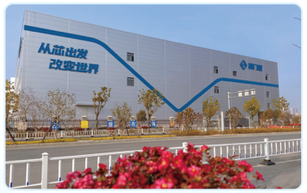

2020

09 **上海狮门半导体有限公司注册成立**

- 公司位于上海松江区
- 注册资本9500万RMB

Sep . **Lionsgate Semi was incorporated**

- Located in Songjiang District at Shanghai
- 95 million RMB registered capital

2021

上海基地（狮门半导体）制造工厂修建改造中

- Shanghai manufacture factory (Lionsgate Semi) was in construction and renovation.

2022

01 **上海基地制造工厂修建改造完成**

03 **上海基地制造工厂实验中心落成**

09 **上海基地产线通产**

Jan. Shanghai manufacture factory was built.

Mar. Advanced laboratory at Shanghai was built.

Sep. Shanghai manufacture factory started production.

2023

03 **上海基地制造工厂实现IGBT大批量生产通过ISO9001质量体系认证**

04 **狮门半导体功率器件生产项目签约成功并落地浙江温岭**
狮门微电子（温岭）股份有限公司（简称：狮门微电子）注册成立

09 **狮门微电子既狮门半导体公司的浙江温岭基地制造工厂土建改造完成**

10 **狮门半导体通过REACH认证和RoHS认证**

12 **狮门半导体通过UL认证**

Mar. Mass production of IGBT at Shanghai factory Lionsgate Semi Was Certificated by ISO9001.

Apr. The power device production project of Lionsgate Semi was successfully signed at Wenling city in Zhejiang province.
Lionsgate Microelectronics was incorporated and Zhejiang manufacture factory was in construction.

Sep. Lionsgate Microelectronics has completed the renovation of its manufacturing plant.

Oct. Lionsgate Semi Was Certificated by REACH & RoHS.

Dec. Lionsgate Semi Was Certificated by UL.

2024

01 **浙江温岭基地制造工厂洁净车间建设完成**

02 **浙江温岭基地制造工厂设备与产线调试中**

05 **狮门半导体通过 IATF 16949 汽车质量管理体系认证**

Jan. The clean workshop construction of Zhejiang Base Manufacturing Plant was completed.

Feb. The production lines of Zhejiang Base Manufacturing Plant are being debugged.

May. Lionsgate Semi was certificated by IATF 16949.

未来可期

Hope a better future.

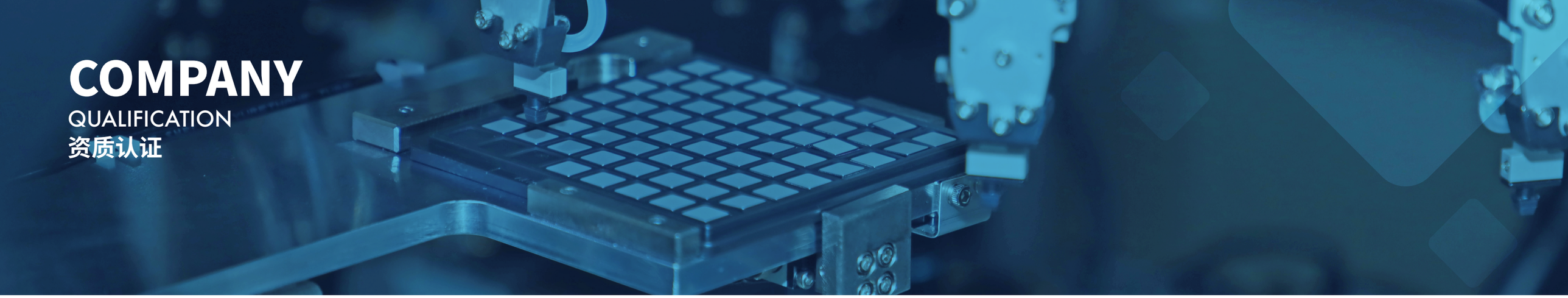

COMPANY
QUALIFICATION
资质认证

专注于
功率半导体的
开发应用和智能制造

Focus on R&D, system application and intelligent manufacturing for power semiconductors.

打造
功率半导体
智能制造工厂

Build a Intelligent Automation Factory for Semiconductor Module.

拥有
自主知识产权和品牌

Own Independent Intellectual Property Rights and Brand.

bsi.

Certificate of Registration

质量管理体系 – IATF 16949:2016

兹证明：

上海狮门半导体有限公司
91310117MA1J4LXU00
中国
上海
松江区
新渡路
新渡路517弄8号
邮编：201607

Shanghai Lionsgate Semiconductor Co., Ltd.
No. 8, Lane 517, Xinbo Road
Maogang
Songjiang District
Shanghai
201607
China

USI: CWK4K9

并运行符合 IATF 16949:2016 要求的质量管理体系，认证范围如下：

驱动和控制系统用功率模块的设计和封装。
注册地址：上海市松江区中山路299号1幢617室
The design and assembly of power modules for drive & control system.
Registered address: Room 617, Building 1, No. 299 Zhongshan Road, Songjiang District, Shanghai

BSI代表：

Michael Lam – Managing Director Assurance, APAC

BSI证书号码：802350
IATF Number: 0517154

Page: 1 of 1

认证日期：2024-05-16　最新发证日期：2024-05-16　有效期至：2027-05-15

...making excellence a habit.™

bsi.

Certificate of Registration

QUALITY MANAGEMENT SYSTEM – ISO 9001:2015

This is to certify that:

Shanghai Lionsgate Semiconductor Co., Ltd.
No. 8, Lane 517, Xinbo Road
Songjiang District
Shanghai
201607
China

上海狮门半导体有限公司
91310117MA1J4LXU00
中国
上海
松江区
新渡路517弄8号
邮编：201607

Holds Certificate No: **FM 782642**

and operates a Quality Management System which complies with the requirements of ISO 9001:2015 for the following scope:

The design and assembly of power modules for drive & control system.
Registered address: Room 617, Building 1, No. 299, Zhongshan Road, Songjiang District, Shanghai
驱动和控制系统用功率模块的设计和封装。
注册地址：上海松江区中山路299号1幢617室

For and on behalf of BSI:

Michael Lam - Managing Director Assurance, APAC

Original Registration Date: 2023-03-22
Latest Revision Date: 2024-03-02

Effective Date: 2023-03-22
Expiry Date: 2026-03-21

Page: 1 of 1

...making excellence a habit.™

Certificate of Compliance

Certificate Number: UL-US-23540764-0

Report Reference: E537723-20231228

Issue Date: 2023-12-28

Issued to:
Shanghai Lionsgate Semiconductor Co.,Ltd.
No.8 Lane 517 ,Xinbo Rd, Maogang , Songjiang District, Shanghai, Shanghai Shi 201600
China

This certificate confirms that representative samples of
QOOX2 - Electrically Isolated Semiconductor Devices - Component

See Addendum Page for Product Designation(s).

Have been evaluated by UL in accordance with the component requ irements in the Standard(s) indicated on this Certificate, UL Recognized compon ents are incomplete in certain constructional features or restricted in performance capabilities and are intended for installation in complete equi pment submitted for investigation to UL LLC.

UL 1557, 6th Ed., Issue Date: 2018-03-19

Additional Information:
See the UL Online Certifications Directory at https://iq.ulprospector.com for additional information.

This Certificate of Compliance indicates that representative sa mples of the product described in the certification report have met the requirements for UL certification. It does not provide authorization to apply the UL Recognized Component Mark. Only the Authorization Page that references the Follow-Up Servi ces Procedure for ongoing surveillance provides authorization to apply the UL Mark.

Only those products bearing the UL Recognized Component Mark sh ould be considered as being UL Certified and covered under UL's Follow- Up Services.

Look for the UL Recognized Component Mark on the product.

David Piscuch
UL Mark Certification Program Manager

UL Solutions

Page 1 of 2

Form#UL2801SDCoC(Low rev 12)

SGS

STATEMENT
OF
REACH COMPLIANCE

Statement No: SGS-RC-CN/23/00019

Power module for drive&control system
(Model numbers are stated in the following page)
of
Shanghai Lionsgate Semiconductor Co.,Ltd
(No.8 Lane 517 ,Xinbo Rd., Maogang , Songjiang District, Shanghai, China)
has been assessed to comply with the requirements of
Regulation (EC) No. 1907/2006
with regard to the scope of
Article 33: Communication obligations on SVHC in articles
Article 67: Substance restriction according Annex XVII

Authorized by

Oct. 11 , 2023

This Compliance Statement (Assessment summary) is only valid in connection with the REACH compliance check Ref. Job No. SH23000012

This Statement is issued by the company under its General Conditions of Services accessible at http://www.sgs.com/terms_and_conditions.htm. Attention is drawn to the limitations of liability, indemnification and jurisdiction issues defined therein. Any unauthorized alteration, forgery or falsification of the content or appearance of this document is unlawful and offenders may be prosecuted to the fullest extent of the law.

Member of the SGS Group (SGS SA)

SGS

CN2300012

Test Report No.: NGBEC23003407401_2
Power module for drive&control system
Model No.(See page two)
of
Shanghai Lionsgate Semiconductor Co.,Ltd.
No.8 Lane 517, Xinbo Rd., Maogang, Songjiang District, Shanghai, China
has been assessed and certificated as meeting the requirement of

RoHS
Restriction of Hazardous Substances
(Test method: IEC 62321 series standards)

This certificate is valid from 2023-10-25 until 2028-10-24.
Issue 1. Certified since 2023-10-25.

Authorized by

on behalf of
SGS Testing & Control Services Singapore Pte Ltd
30 Boon Lay Way,03-01 609957 Singapore
The validity of this certificate is maintained through on-going surveillance inspections.

Page 1 of 2

The certificate is issued by the company under its General Conditions for Certification Services accessible at http://www.sgs.com/terms_and_conditions.htm. Attention is drawn to the limitations of liability, indemnification and jurisdiction issues defined therein. Any unauthorized alteration, forgery or falsification of the content or appearance of this document is unlawful and offenders may be prosecuted to the fullest extent of the law.

TYPE

DEFINITION FOR IGBT

产品命名规则(IGBT)

PA 075 G 120 K0 XXXXX

CIRCUIT TYPE

PA: 3 Phase Bridge+Brake
PB: 3 Phase Bridge
DA: Dual/Half Bridge
DB: Half Bridge without NTC
FA: Fourpack
FB: Fourpack+Rectifier
ZA: Single Switch
SA: Sixpack

CURRENT RATING

010:	Ic = 10A	**150:**	Ic = 150A
015:	Ic = 15A	**200:**	Ic = 200A
020:	Ic = 20A	**275:**	Ic = 275A
025:	Ic = 25A	**300:**	Ic = 300A
035:	Ic = 35A	**400:**	Ic = 400A
040:	Ic = 40A	**450:**	Ic = 450A
050:	Ic = 50A	**600:**	Ic = 600A
075:	Ic = 75A	**800:**	Ic = 800A
100:	Ic = 100A	**820:**	Ic = 820A

MODULE TYPE

G: IGBT Module
M: Si MOS
C: SiC MOS
H: Hybrid IGBT
F: High Speed IGBT
B: IGBT/FWD Separate Bin

VOLTAGE

120: Vces = 1200V
170: Vces = 1700V
065: Vces = 650V
075: Vces = 750V
330: Vces = 3300V

PACKAGE TYPE

K0: Econo Pack 3 2 Pin
K1: Econo Pack 3 3 Pin
K2: Econo PIM3 4 Pin
K4: Econo PIM3 4 - in - 1 package
K6: Econo Pack 3 6 - in - 1 package
M0: Econo Dual 3
N0: Econo PIM 2
N1: Econo Pack 2 6-in-1 package
N2: Econo PIM 2 KT3
A0: Hybrid Pack Drive
AL: Hybrid Pack Drive Long Tab
A1: Hybrid Pack 1
T1 : 34mm
T0 : 62mm
W1: Easy PIM 1B / Easy Pack 1B
W2: Easy PIM 2B / Easy Pack 2B
W3: Easy Pack 3B
W4: Easy Pack 4B
C0: DCM - 1000

CUSTOM

TYPE

DEFINITION FOR SiC

产品命名规则(SiC)

SA 02 C 120 A0 XXXXX

CIRCUIT TYPE

DA: Dual/Half Bridge
SA: Sixpack

TURN-ON RESISTANCE

02: 2 mΩ
03: 3 mΩ
04: 4 mΩ
05: 5 mΩ

MODULE TYPE

C: SiC MOS

VOLTAGE

120: Vdss = 1200V
170: Vdss = 1700V

PACKAGE TYPE

A0: Hybrid Pack Drive
A1: Hybrid Pack 1
C0: DCM-1000

CUSTOM

PRODUCT
DATASHEET
产品选型

Y34mm

DB系列 (DB series: Half Bridge without NTC)

额定电压 Rated Voltage: 650V / 1200V / 1700V
电流范围 Current Range: 75A / 100A / 150A / 200A / 225A / 300A

优势特点 Main Features:

先进导热工艺和散热设计
低损耗，低漏感，强短路能力
高开关频率
大温度变化范围

Best design of heat conduction technology & heat disspation struture
Low consumption, low leakage inductance, strong short-circuit capacity
High switching frequency
Wide temperature range

行业应用 Applications:

工业变频器	Frequency converters
电焊机	Inverter welder
感应加热	Induction heater
不间断电源UPS	Uninterrupted power supply (UPS)
电机制动	Motor control
太阳能光伏	PV solar

外型尺寸图
Outline Dimension

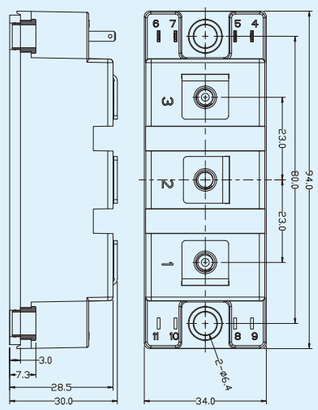

产品型号 Part Number	Vces (V)	Ic (A)	Vce(sat) Tj=25 °C (V)	Eon+Eoff Tj=25 °C (mj)	Rth, jc (K/W)	拓扑 Circuit Diagram
DB075G120T1	1200	75	1.63	13.35@Rg=9.1Ω	0.38	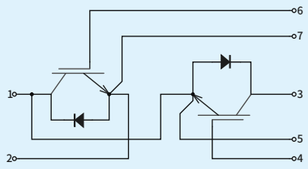
DB075G170T1	1700	75	1.78	29.3@Rg=20Ω	0.25	
DB100G120T1	1200	100	1.86	16.18@Rg=15Ω	0.25	
DB100G170T1	1700	100	1.66	31.8@Rg=6.8Ω	0.18	
DB150G120T1	1200	150	1.45	30@Rg=10Ω	0.23	
DB225G065T1	650	225	1.26	7.27@Rg=4.1Ω	0.23	

Y62mm

DB系列 (DB series: Half Bridge without NTC)

额定电压 Rated Voltage: 650V / 1200V / 1700V
电流范围 Current Range:150A / 200A / 300A / 400A / 450A / 600A

优势特点 Main Features:

先进导热工艺和散热设计
低开关损耗
低漏感，强短路能力
低饱和电压
高开关频率

Best design of heat conduction technology & heat disspation struture
Low switching loss, low leakage inductance,
Low saturation voltage
Strong short-circuit capacity
High switching frequency

行业应用 Applications:

储能	Energy storage
风力发电	Wind power converter
工业变频器不间断电源UPS	Frequency converters Uninterrupted power supply (UPS)
功率电源	Active filters
可再生能源	Renewable energy
电源质量APF、SVG等	Active Power Filter (APF) Static VAR Generator (SVG), etc.

外型尺寸图
Outline Dimension

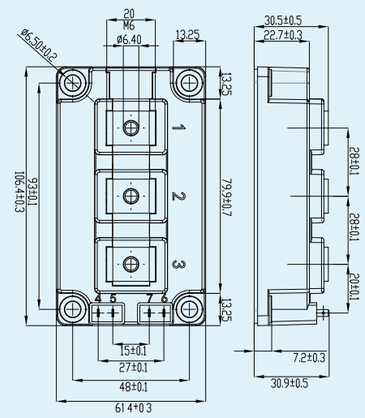

产品型号 Part Number	Vces (V)	Ic (A)	Vce(sat) Tj=25 °C (V)	Eon+Eoff Tj=25 °C (mj)	Rth, jc (K/W)	拓扑 Circuit Diagram
DB150G170T0	1700	150	1.58	50.44@Rg=2.2Ω	0.15	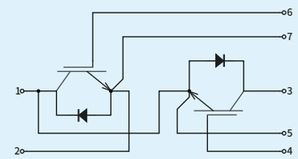
DB200G120T0	1200	200	1.63	27.62@Rg=4.1Ω	0.12	
DB200G170T0	1700	200	1.65	55.43@Rg=2.2Ω	0.12	
DB300G120T0	1200	300	1.55	55.1@Rg=5.5Ω	0.12	
DB400G065T0	650	400	1.4	16.45@Rg=3.3Ω	0.13	
DB450G120T0	1200	450	1.45	65.2@Rg=1.6Ω	0.083	
DB600G120T0	1200	600	1.45	121.2=@Rg=1.6Ω	0.08	

产品型号 Part Number	Vdss (V)	Rds (on) Tj=25°C(mΩ)	Eon+Eoff Tj=25 °C (mj)	Rth, jc (K/W)	
DB04C120T0	1200	3.50	10.12	0.097	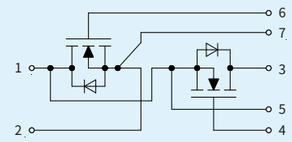

EconoPIM2

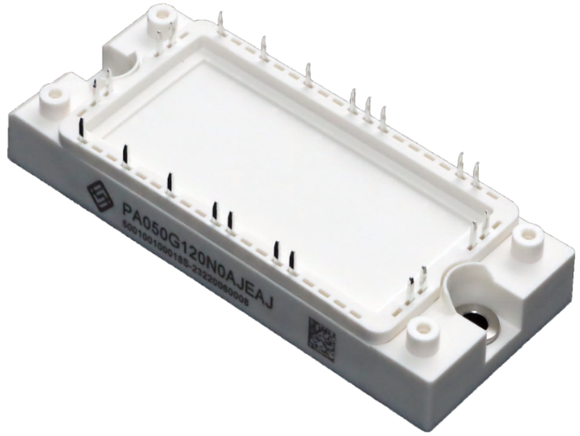

PA系列 (PA series: 3 Phase Bridge+Brake)
PB系列 (PB series: 3 Phase Bridge)
SA系列 (SA series: Sixpack)

额定电压 Rated Voltage: 650V / 1200V
电流范围 Current Range: 25A / 35A /40A / 50A /75A / 100A

优势特点 Main Features:

先进导热工艺和散热设计
低开关损耗，低饱和电压
低漏感，强短路能力
高开关频率，优异的EMC表现

Best design of heat conduction technology & heat disspation structure
Low switching loss, low leakage inductance, low saturation voltage
Strong short-circuit capacity
High switching frequency
Good EMC performance

行业应用 Applications：

工业变频器工业伺服
不间断电源UPS电焊机
感应加热
风力发电
太阳能光伏
轨道交通

Frequency converters,
Industrial servo controller
UPS, Inverter welder, Induction heater,
Wind power, PV solar, Rail Transit, etc.

外型尺寸图
Outline Dimension

PIM2 PA, PB series

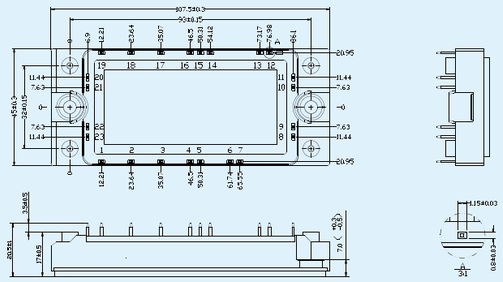

PIM2 SA series

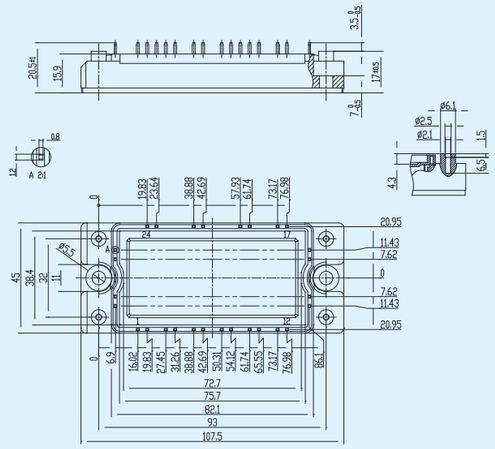

产品型号 Part Number	Vces (V)	Ic (A)	Vce(sat) Tj=25 °C (V)	Eon+Eoff Tj=25 °C (mj)	Rth, jc (K/W)
PA025G120N0	1200	25	1.75	3.50@Rg=15Ω	0.67
PA025G120N2	1200	25	1.75	3.50@Rg=15Ω	0.67
PA040G120N2	1200	40	1.58	8.16@Rg=15Ω	0.50
PA050G120N0	1200	50	1.7	10.2@Rg=15Ω	0.50
PA075G120N3	1700	75	1.7	17.2@Rg=8.2Ω	0.42
PB050G120N0	1200	50	1.7	10.2@Rg=15Ω	0.50
PB075G120N3	1200	75	1.85	14.25@Rg=10Ω	0.48
SA075G120N1	1200	75	1.54	8.65@Rg=3.3Ω	0.38
FA075F120N4	1200	75	1.54	8.65@Rg=3.3Ω	0.38

拓扑
Circuit Diagram

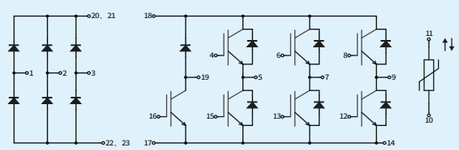

PA series

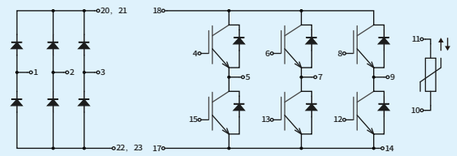

PB series

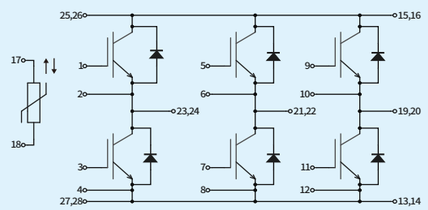

SA series

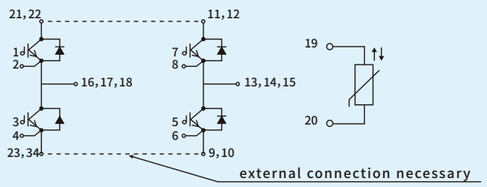

FA series

EconoPIM3

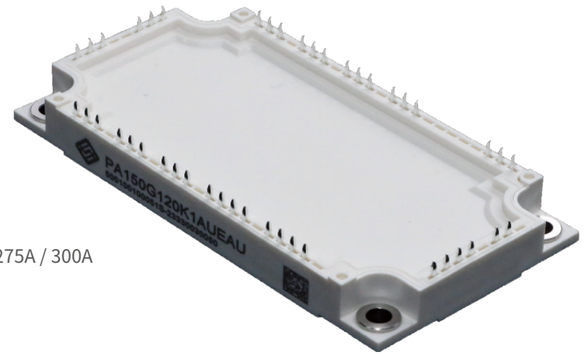

PA系列 (PA series: 3 Phase Bridge + Brake)
PB系列 (PB series: 3 Phase Bridge)
SA系列 (SA series: Sixpack)

额定电压 Rated Voltage: 650V / 1200V
电流范围 Current Range: 50A / 75A / 100A / 150A / 200A / 275A / 300A

FB系列 (FB series: 4 Phase Bridge)

额定电压 Rated Voltage: 1700V
电流范围 Current Range: 75A / 100A / 150A

优势特点 Main Features:

先进导热工艺和散热设计
低开关损耗，低饱和电压
低漏感，强短路能力
高开关频率，优异的EMC表现

Best design of heat conduction technology & heat disspation structure
Low switching loss, low leakage inductance, low saturation voltage
Strong short-circuit capacity
High switching frequency
Good EMC performance

行业应用 Applications:

工业变频器　风力发电
工业伺服　太阳能光伏
不间断电源UPS　轨道交通
感应加热　新能源汽车

Frequency converters,
Industrial servo controller
UPS, Inverter welder, Induction heater,
Wind power, PV solar, Rail Transit,
New energy vehicles etc.

外型尺寸图
Outline Dimension

PIM3 PA PB 75A 100A series

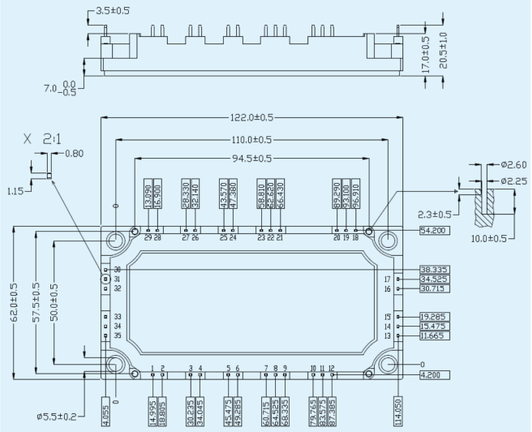

PIM3 PA PB 150A series

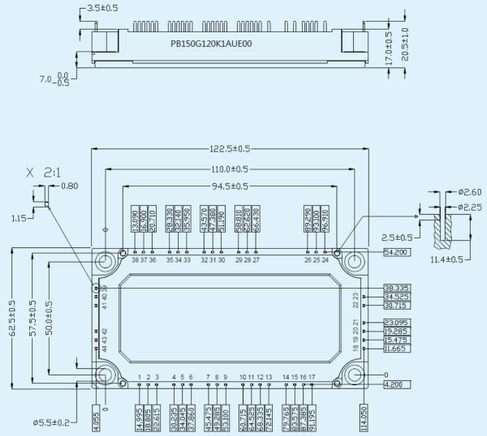

产品型号 Part Number	Vces (V)	Ic (A)	Vce(sat) Tj=25 °C (V)	Eon+Eoff Tj=25 °C (mj)	Rth, jc (K/W)	拓扑 Circuit Diagram
PA050G120K0	1200	50	1.67	10.2@Rg=6.8Ω	0.50	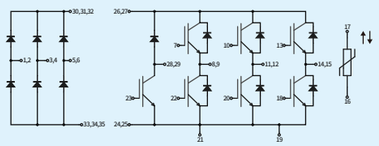
PA050G120K3	1200	50	1.67	10.2@Rg=6.8Ω	0.50	
PA750G120K0	1200	75	1.54	9.75@Rg=5Ω	0.38	
PA075G120K3	1200	75	1.54	9.75@Rg=5Ω	0.38	
PA100G120K0	1200	100	1.84	18.17@Rg=6.8Ω	0.25	
PA150G120K1	1200	150	1.45	13.76@Rg=2.2Ω	0.23	
PA200G120K2	1200	200	1.59	22.58@Rg=3.3Ω	0.205	
PB075G120K0	1200	75	1.54	9.75@Rg=5Ω	0.38	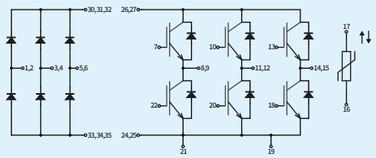
PB100G120K0	1200	100	1.84	16.17@Rg=6.8Ω	0.25	
PB150G120K1	1200	150	1.45	17.36@Rg=2.2Ω	0.23	
PB200G065K1	650	200	1.37	6.24@Rg=1.5Ω	0.23	
SA100G120K6	1200	100	1.84	16.17@Rg=6.8Ω	0.25	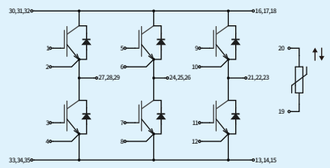
SA150G120K6	1200	150	1.45	17.36@Rg=2.2Ω	0.23	
SA200G065K6	650	200	1.37	6.92@Rg=3.3Ω	0.23	
SA200G120K6	1200	200	1.59	25.6@Rg=5Ω	0.20	
SA300G075K7	750	300	1.54	12.47@Rg=1.5Ω	0.24	

EconoDual3

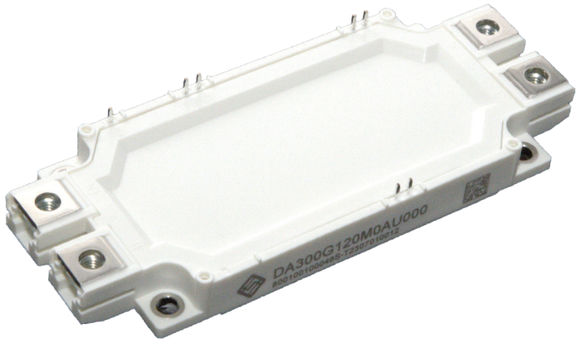

DA系列 (DA series: Dual/Half Bridge)

额定电压 Rated Voltage: 650V / 1200V / 1700V
电流范围 Current Range: 150A / 300A / 450A / 600A
800A / 900A

优势特点 Main Features:

先进导热工艺和散热设计
低漏感，强短路能力
成熟的均流技术
高可靠性

Best design of heat conduction technology & heat disspation structure
Low leakage inductance, strong short-circuit capacity
Mature current evenness technology
High reliability (Hi-Rel)

行业应用 Applications:

工业变频器
工业伺服
不间断电源UPS
感应加热
储能
风力发电
太阳能光伏
轨道交通
新能源汽车

Frequency converters,
Industrial servo controller,
UPS, Induction heater, Energy storage,
Wind power, PV solar, Rail Transit,
New energy vehicles etc.

外型尺寸图
Outline Dimension

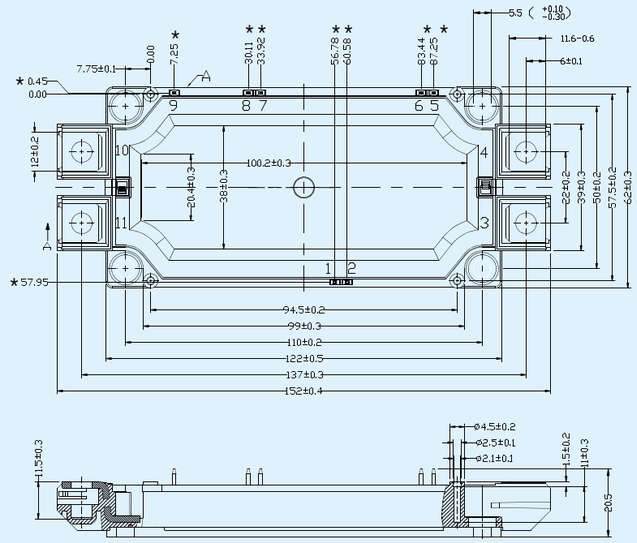

产品型号 Part Number	Vces (V)	Ic (A)	Vce(sat) Tj=25 °C (V)	Eon+Eoff Tj=25 °C (mj)	Rth, jc (K/W)
DB300G120M0	1200	300	1.55	55@Rg=5Ω	0.13
DB300G170M0	1700	300	1.65	101.4@Rg=3.3Ω	0.09
DB450G120M0	1200	450	1.5	61.7@Rg=2.2Ω	0.095
DB450G170M0	1700	450	1.65	163.1@Rg=3.3Ω	0.078
DB600F065M0	650	600	2.00	26@Rg=1.3Ω	0.103
DB600G120M0	1200	600	1.7	118.3@Rg=1.6Ω	0.06
DB600G170M0	1700	600	1.72	186@Rg=3.3Ω	0.055

产品型号 Part Number	Vdss (V)	Rds (on) Tj=25°C (mΩ)	Eon+Eoff Tj=25 °C (mj)	Rth, jc (K/W)
DB03C120M0	1200	2.3	24.62	0.053
DB05C120M0	1200	4.7	6.31	0.086

拓扑
Circuit Diagram

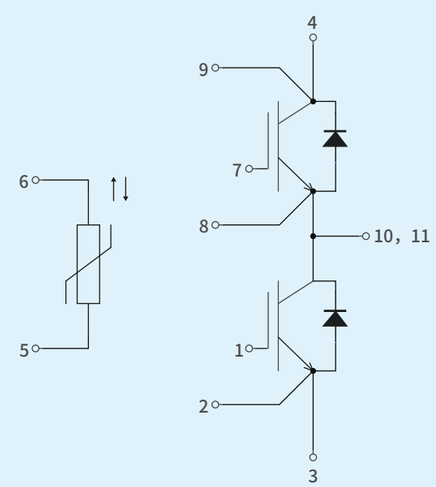

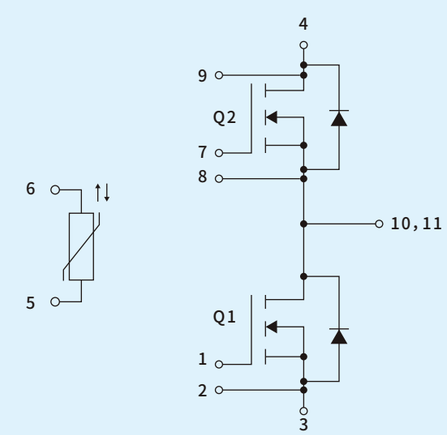

Hybrid Pack Drive

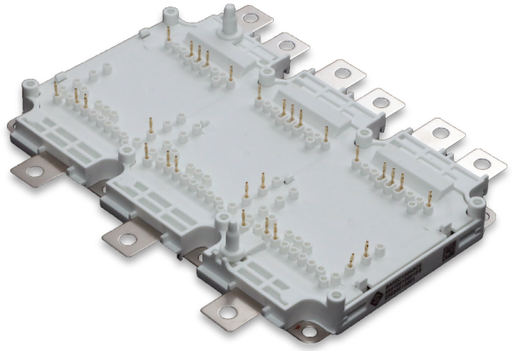

SA系列 (SA series: Sixpack)

额定电压 Rated Voltage: 750V / 1200V
电流范围 Current Range: 400A / 450A / 500A / 600A / 820A

SA系列 (SA series: Sixpack SiC)碳化硅

额定电压 Rated Voltage: 1200V
导通阻抗 Turn-on Resistance: 2mΩ / 3mΩ

优势特点 Main Features:

先进导热工艺和散热设计
低漏感
强短路能力
成熟的均流技术
高可靠性

Best design of heat conduction technology & heat disspation structure
Low leakage inductance, strong short-circuit capacity
Mature current evenness technology
High reliability (Hi-Rel)

行业应用 Applications:

不间断电源UPS
电能质量
储能
风力发电
太阳能光伏
轨道交通
新能源汽车

Uninterrupted power supply (UPS)
Power quality solutions, Energy storage
Wind power, PV solar, Rail Transit,
New energy vehicles etc.

外型尺寸图
Outline Dimension

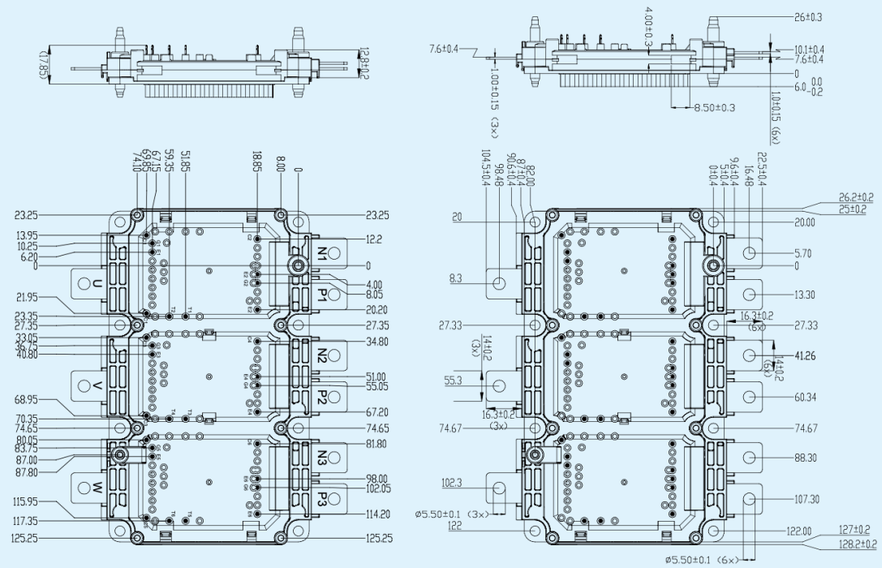

产品型号 Part Number	Vdss (V)	Rds(on) Tj=25°C(mΩ)	Eon+Eoff Tj=25°C(mj)	Rth, jc (K/W)	拓扑 Circuit Diagram
SA02C120A0	1200	1.75	25.52	0.07	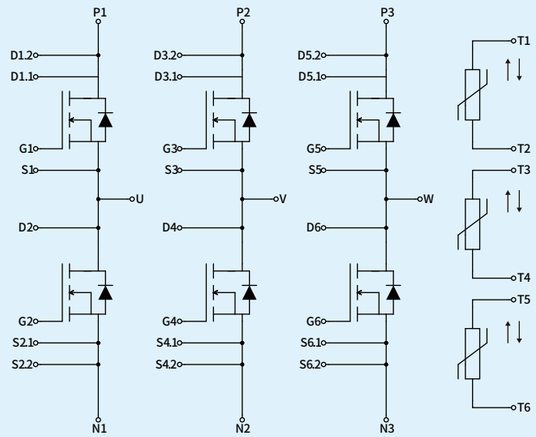

Hybrid Pack1

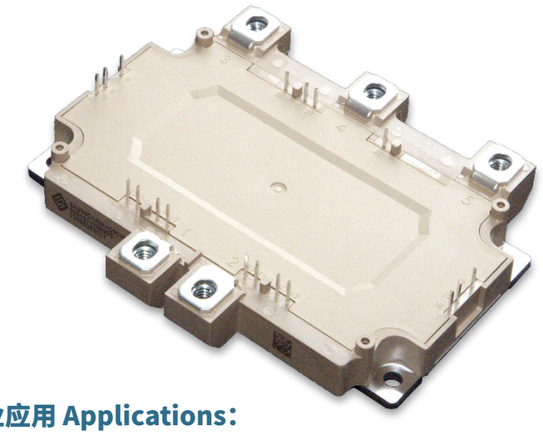

SA系列 (SA series: Sixpack)

额定电压 Rated Voltage: 650V / 750V /1200V
电流范围 Current Range: 200A / 300A / 400A /550 A

SA系列 碳化硅 (SA series: Sixpack SiC)

额定电压 Rated Voltage: 1200V
导通阻抗 Turn-on Resistance: 3mΩ

优势特点 Main Features:

先进导热工艺和散热设计
低漏感
强短路能力
高可靠性

Best design of heat conduction technology & heat dissipation structure
Low leakage inductance, strong short-circuit capacity
High reliability (Hi-Rel)

行业应用 Applications:

工业变频器
不间断电源UPS
感应加热
功率电源
电能质量
储能
风力发电
太阳能光伏
轨道交通

Frequency converters,
UPS, Induction heater,
Power quality solutions, Active filters,
Energy storage, Wind power, PV solar,
Rail Transit, etc.

外型尺寸图
Outline Dimension

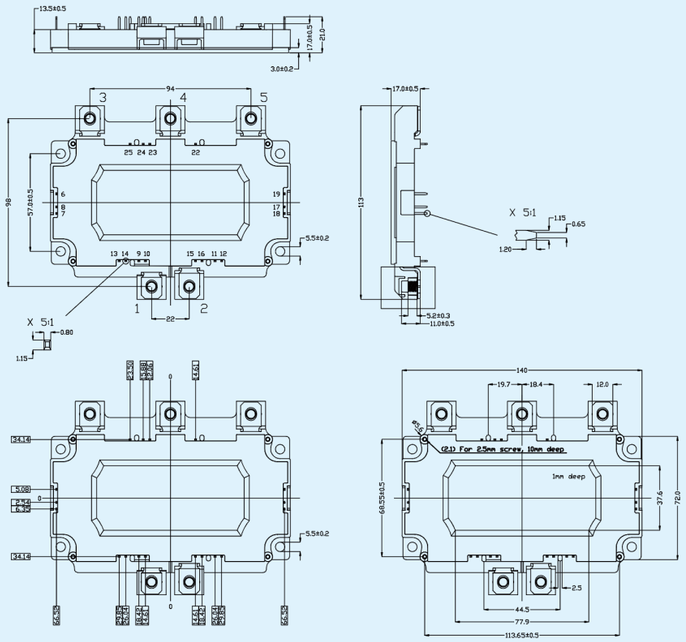

产品型号 Part Number	Vces (V)	Ic (A)	Vce(sat) Tj=25 °C (V)	Eon+Eoff Tj=25 °C (mj)	Rth, jc (K/W)	拓扑 Circuit Diagram
SA550G075A1	750	550	1.48	23.83@Rg=1.5Ω	0.14	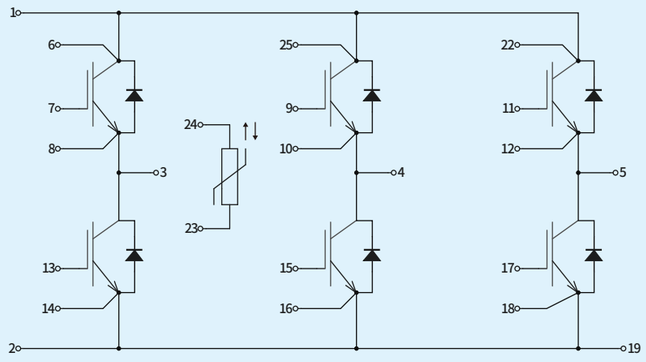

Easy 1B

SA系列 (SA series: Sixpack)

额定电压 Rated Voltage: 650V / 1200V
电流范围 Current Range: 10A / 15A / 20A / 35A / 50A

优势特点 Main Features:

高性能陶瓷基板技术，
热性能得以RthJH大幅度改进
高共模瞬变抗扰度
先进封装技术
优异的键合线工艺，
温度循环性能得以良好提升
优异的EMC表现

High performance of ceramic substrate technology can greatly improve thermal properties
High common-mode transient immunity
Advanced packaging technology
Good wire-bonding can improve temperature cycle
Good EMC performance

行业应用 Applications:

工业变频器
工业伺服
不间断电源UPS
感应加热
功率电源
储能
风力发电
太阳能光伏
新能源汽车

Frequency converters,
Industrial servo controller
UPS, Inverter welder, Induction heater,
Wind power, PV solar,
New energy vehicles etc.

外型尺寸图
Outline Dimension

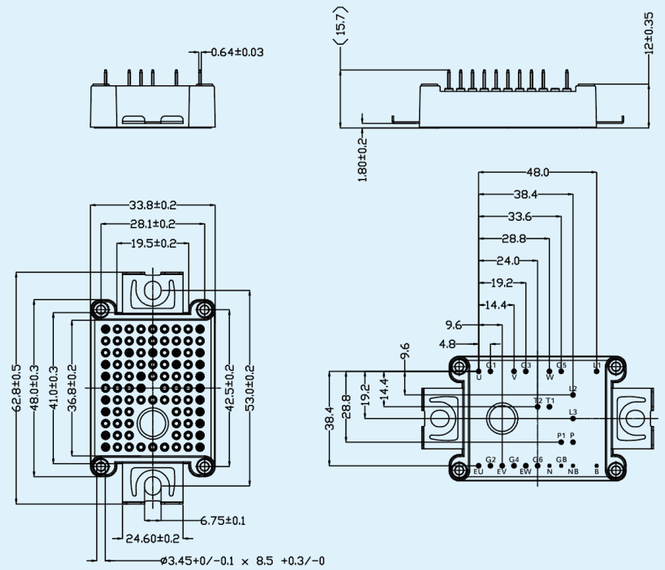

产品型号 Part Number	Vces (V)	Ic (A)	Vce(sat) Tj=25 °C (V)	Eon+Eoff Tj=25 °C (mj)	Rth, jc (K/W)	拓扑 Circuit Diagram
PA015G120W1	1200	15	1.77	1.73@Rg=27.9Ω	1.2	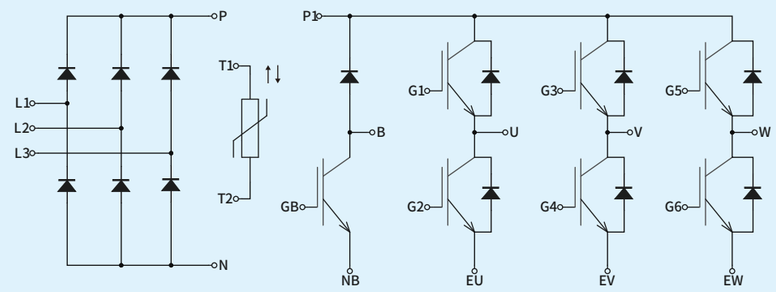

EASY 2B

PA系列(PA series: 3 Phase Bridge + Brake)
PB系列(PB series: 3 Phase Bridge)
SA系列(SA series: Sixpack)
TL系列(TL series: 3 Level)

额定电压 Rated Voltage: 650V / 1200V
电流范围 Current Range: 15A / 25A / 35A / 40A / 50A / 75A / 100A / 150A

优势特点 Main Features:

高性能陶瓷基板技术
热性能得以RthJH大幅度改进
高共模瞬变抗扰度
先进封装技术
优异的键合线工艺
温度循环性能得以良好提升
优异的EMC表现

High performance of ceramic substrate technology can greatly improve thermal properties
High common-mode transient immunity
Advanced packaging technology
Good wire-bonding can improve temperature cycle
Good EMC performance

行业应用 Applications:

工业变频器　　储能
工业伺服　　太阳能光伏
不间断电源UPS　　新能源汽车
功率电源

Frequency converters,
Industrial servo controller,
UPS, Inverter welder, Induction heater,
Wind power, PV solar,
New energy vehicles etc.

外型尺寸图
Outline Dimension

EasyPIM2B

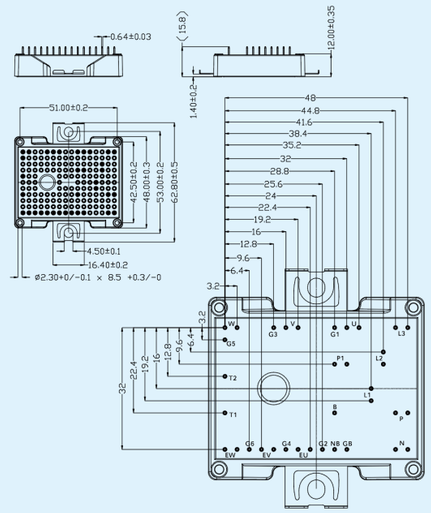

EasyPack2B

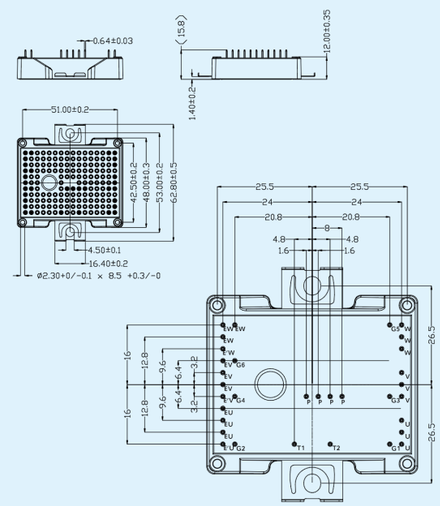

产品型号 Part Number	Vces (V)	Ic (A)	Vce(sat) Tj=25 °C (V)	Eon+Eoff Tj=25 °C (mj)	Rth, jc (K/W)
PA025G120W2	1200	25	1.75	3.32@Rg=15Ω	1.15
PA035G120W2	1200	35	1.7	6.71@Rg=6.8Ω	0.72
PA050G120W2	1200	50	1.7	6.71@Rg=6.8Ω	0.72
SA050G120W2	1200	50	1.71	5.6@Rg=6.8Ω	0.6
SA075G120W2	1200	75	1.7	10.85@Rg=4.1Ω	0.42

拓扑
Circuit Diagram

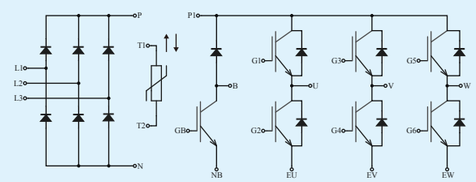

PA series

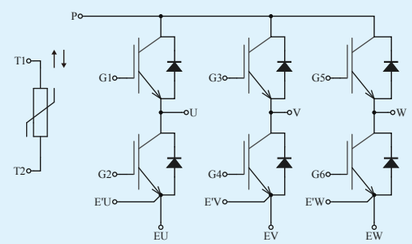

SA series

DCM-1000

DA系列(DA series SiC: Dual/Half Bridge)碳化硅

额定电压 Rated Voltage: 1200 V
导通阻抗 Turn-on Resistance: 2mΩ

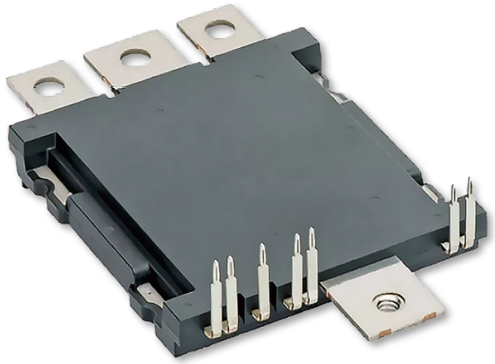

优势特点 Main Features:

先进导热工艺和散热设计
散热能力强大低开关损耗,低饱和电压
低漏感,强短路能力
优异的EMC表现

Best design of heat conduction technology & heat disspation structure
Low switching loss, low leakage inductance, strong short-circuit capacity
Good EMC performance

行业应用 Applications:

工业变频器
功率电源
储能
太阳能光伏
新能源汽车

Frequency converters,
Active filters,
Energy storage
PV solar,
New energy vehicles etc.

外型尺寸图
Outline Dimension

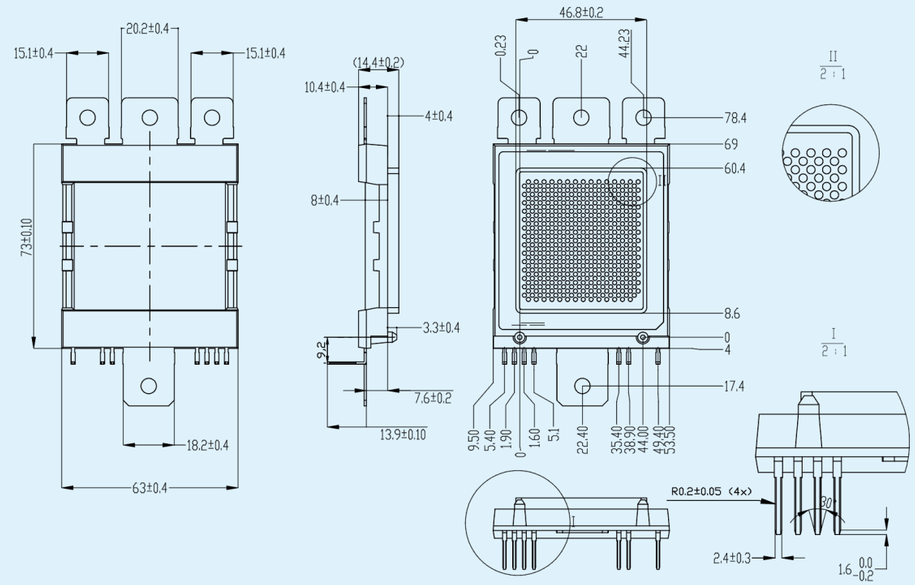

产品型号 Part Number	Vdss (V)	Rds(on) Tj=25°C(mΩ)	Eon+Eoff Tj=25°C(mj)	Rth, jc (K/W)	拓扑 Circuit Diagram
DA02C120C0	1200V	2	65	0.12	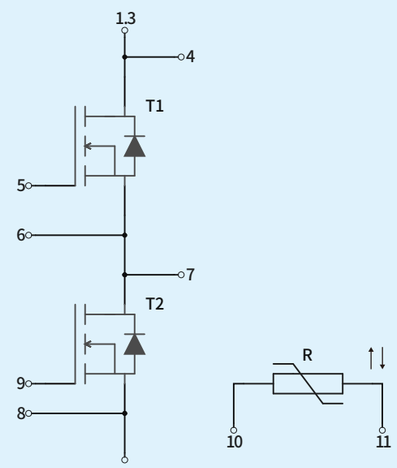

APPLICATION

应用领域

应用特性
Features

- 高功率密度、驱动电路简单以及宽安全工作区等
- 中大功率、中低频率电力电子设备首选
- 工作频率低于105Hz的范围内，硅基IGBT是首选的功率半导体器件，功率范围涵盖几千瓦至十兆瓦

- High power density, simple drive circuit and wide safe operation area
- Preferred power electronic equipments with medium or high power and low or medium frequency
- Silicon-based IGBT is the first choice of power semiconductor devices for the working frequency range below 105Hz, power ranges from several kilowatts to 10 megawatts

典型应用领域
Typical Application Fields

新能源

新能源汽车
（主电驱、OBC、空调、转向等）

新能源发电
（光伏逆变器、风电变流器）

New Energy

New energy vehicles
(main electric drive, OBC, air conditioning, steering, etc.)
New energy power generation (photovoltaic inverter, wind power converter)

工业控制

变频器
逆变焊机
不间断电源UPS等

Industrial Control

Frequency converters,
Inverter welder,
UPS, etc.

变频白色家电及其他

变频白电
轨道交通（牵引变流器）
智能电网等

Home Appliance and Others

Home appliance
Rail transit (traction converter)
Intelligent Power Management（IPM）

ADVANCED
LABORATORY
先进实验室

设有4大功能试验区：可独立进行17项可靠性测试、失效分析等各类试验室级产品分析及检测试验。

4 functional test areas: 17 reliability tests, failure analysis and other laboratory-scale product analysis and detection tests can be independently carried out.

测试规范完善，具备强大质量监控体系、系统验证能力和经验丰富的专业实验团队。

With perfect test specifications, the Company has a strong quality monitoring system, system verification ability and an experienced professional experimental team.

生产品质管控能力一流，助力高可靠性模块生产，系列产品良品率已达98%。

The production quality control ability is first-class, which helps the production of high-reliability modules, and the yield of series products has reached **98%.**

以顾客为导向的应用测试，可及时响应客制产品测试和检测需求，助力客制产品系列化开发。

Customer-oriented application testing can respond to the testing and detection requirements of customized products in time and help the serial development of customized products.

四大功能测试区 4 Functional Test Areas

提升产品研发的速度，保证批量产品的高品质和稳定性，提供一流的故障分析及可靠度测试分析服务！

Improve efficiency of R&D, ensure the high quality and stability products, provide first-class test service!

生产特性监控 On-line Production Inspection

制程特性

焊接空洞
打线监控
成品弯曲等生产全特性监控

Production Property

Welding cavity
Wire bonding monitoring
Finished product functional test, etc.

动态特性

开关特性
反向恢复
电容特性
栅极电荷
短路测试
寄生电容

Dynamic Property

Switching characteristics
Reverse recovery
Capacitance characteristics
Gate charge
Short circuit test
Stray capacitance

静态特性

静态参数
特性曲线

Static Property

Static parameters
Characteristic curves

可靠性监控 Reliability Tests

环境可靠性

西门子功率循环
高温反偏
高温拉力测试
高温栅偏
高温高湿反偏
震动测试
跌落测试
温度循环
冷热冲击
高低温储存
高加速老化

Environment Reliability

Power cycling
HTRB
High temp. ensile test
HTGB
H3TRB
Vibration Test
Drop Test
TCT
TST
HTS & LHS
HAST

失效分析 Failure Analysis

失效分析

3D 轮廓
RA、RZ粗糙度
金相显微镜
EDX元素分析
机械截面分析
SAT超声波扫描
2D Xray
离子无损截面分析
KEYSIGHT曲线追踪
SEM扫描

Failure Analysis

3D Contour
RA、RZ Roughness
Optical Microscope（OM）
EDX
AFM
SAT
2D Xray
Cross Section Polisher（CP）
KEYSIGHT technologies
Scanning Electron Microscopy (SEM)

应用测试 Application Test

车载系统

汽车牵引系统
车载充电系统
汽车充电桩
光伏逆变系统
智能电网逆变系统
铁路逆变系统

Vehicle-mounted Systems

Automobile traction system
Vehicle-mounted charging system
Vehicle charging pile
Photovoltaic inverter system
Smart grid inverter system
Railway inverter system

可靠性实验室 Reliability Laboratory

可靠性试验是发现产品潜在的失效机制，评估产品的失效率，进而确保产品在正常使用阶段不会出现任何失效机制。

Reliability Test is the process that can identify potential failure mechanisms of product, evaluate its failure rate, and ensure that the product does not exhibit any failure mechanisms during normal use.

机械测试 Mechanical Test

	测试项目 Test Item	测试目的 Test Purpose	测试标准 Test Standard	测试能力 Test Ability
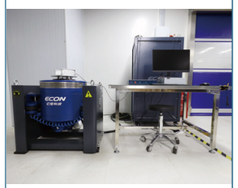	振动测试 Vibration	验证机械结构的牢固性和电气连接的稳定性。模拟器件在应用过程中的振动负载，并验证了器件在出现故障模式(如结构脱落和材料疲劳)时的抗振动能力。 Verify the robustness of the mechanical structure and the stability of the electrical connections. The vibration load of the power module during application is simulated and the vibration resistance of the power module is verified in the presence of failure modes such as structural detachment and material fatigue.	IEC 60068 2-6	频率范围: 1~3500Hz 最大加速度: 981m/s 可测试X、Y、Z 三个方向 Frequency Range: 1~3500Hz Amax: 981m/s X, Y, Z directions test
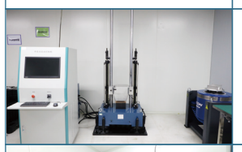	机械冲击测试 Shock	验证机械结构的整体性和电气连接的稳定性 Verify the integrity of the mechanical structure and the stability of the electrical connections.	IEC 60068 2-27	加速度范围 :0~15000m/s2 脉宽: 0.5~20ms 可测试X、Y、Z 三个方向 Acceleration range :0~15000m/s2 Pulse Width: 0.5~20ms X, Y, Z directions test
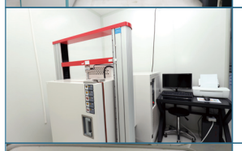	端子强度 Terminal Strength	评估产品端子是否有足够的机械强度 Evaluate whether the product terminals have sufficient mechanical strength.	外观无破损、PIN针无脱落 The appearance is not damaged, and the PIN is not falling off.	温度范围: -40~200°C 拉力范围: 0~960N.m Temp. Range: -40~200°C Tension Range: 0~960N.m
	安装强度 Mounting Strength	评估产品在固定力矩下的可靠性 Evaluate the reliability of the product in condition of fixed torque.	外壳完整度、无破裂 Shell integrity, no rupture	扭力范围 : 0.2~20N.m Torque Range : 0.2~20N.m
	焊锡性 Solderability	评估产品的可焊性 Evaluate the weldability of the product.	GB/T 2423.28	温度范围: 0~350°C Temp. Range: 0~350°C
	焊接耐热性 Resistance to Solder Heat	评估产品PIN针的耐热性 Evaluate the heat resistance of product pins.	GB/T 2423.28	温度范围: 0~350°C Temp. Range: 0~350°C

环境测试 Environmental Test

	测试项目 Test Item	测试目的 Test Purpose	测试标准 Test Standard	测试能力 Test Ability
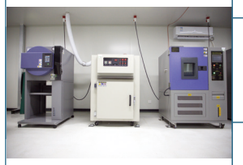	高温存储试验 HTS	评估产品在高温条件下的可靠性及电性性能 Evaluate the reliability and electrical performance of products in condition of high temperature.	IEC 60749-6	温度范围: 60~300 °C Temperature range: 60~300 °C
	低温存储测试 LHS	评估产品在低温条件下的可靠性及电性性能 Evaluate the reliability and electrical performance of products in condition of low temperature.	JESD22-A119	温度范围: -70~150 ° C 湿度范围: 20~98% RH Temperature range: -70~150 ° C Humidity range: 20~98% RH
	高加速老化测试 HAST	评估产品在环境应力与工作应力条件下的产品寿命及电性性能 Evaluate the lifespan and electrical performance of products in condition of environmental stress and working stress.	IEC 60068-2-66	温度范围: 105~142.9°C 湿度范围:75~100%RH 压力范围:0.02~0.196MPa Temperature range: 105~142.9°C Humidity range:75~100%RH Pressure range:0.02~0.196MPa
	温湿度储存测试 THS	评估产品在恒温恒湿条件下的可靠性及电性性能 Evaluate the reliability and electrical performance of products in condition of constant temperature and humidity.	IEC 60068-2-67	温度范围: -20~180 ° C 湿度范围: 10~98% RH Temperature range: -20~180 ° C Humidity range: 10~98% RH
	温度循环试验 TCT	用于模拟外界温度变化对产品的影响，验证器件或模块的整体结构和材料 Used to simulate the impact of external temperature changes on products, verify the overall structure and materials of power devices or modules.	IEC 60749-25	温度范围: -70~180 ° C 温度变换速率:26°C/min Temperature range: -70~180 ° C Temperature change rate: 26 ° C/min
	温度冲击测试 TST	验证IGBT在被动温度变化的情况下对机械应力的抵抗能力 Verify the resistance of IGBT to mechanical stress in condition of passive temperature changes.	IEC 60068-2-14	高温温度范围: 60~205 ° C 低温温度范围: -77~0 ° C 温度转换阶段时间: 10s High temperature range: 60~205 ° C Low temperature range: -77~0 ° C Temperature conversion phase time: 10s

耐力测试 Endurance Test

	测试项目 Test Item	测试目的 Test Purpose	测试标准 Test Standard	测试能力 Test Ability
	高温反 偏老化试验 HTRB	主要用于验证长期稳定情况下芯片的漏电流，考验对象是IGBT边缘结构和钝化层的弱点或退化效应。 Evaluate the leakage current of the power device in condition of high temperature and reverse bias conditions.	IEC 60749-9	温度范围: 20~200 ° C 电压范围: 0~2000V Temperature range: 20~200 ° C Voltage range: 0~2000V
	高温栅 反偏老化试验 HTGB	主要用于验证栅极漏电流的稳定性，考验对象是IGBT栅极氧化层。 Verify the stability of gate leakage current, the test object is the IGBT gate oxide layer.	IEC 60749-9	温度范围: 20~200 ° C 电压范围: 0-30V Temperature range: 20~200 ° C Voltage range: 0-30V
	高温高湿 反偏老化试验 H3TRB	又名双85测试，主要用于测试湿度对功率器件长期特性的影响。 Also known as Double 85 Test, it is mainly used to test the impact of humidity on the long-term characteristics of power devices.	IEC 60749-9	温度范围: 20~100 ° C 湿度范围: 25~98% RH 电压范围: 0-2000V Temperature range: 20~100 ° C Humidity range: 25~98% RH Voltage range: 0-2000V
	功率循环测试 (分钟级) PC / min	评估器件在重复热应力下的可靠性和寿命。(分钟级) Evaluate the reliability and lifespan of the device in condition of repeated thermal stress. (Minute-level)	IEC 60749-34	设备输出:四通道 单通道最大电流600A 最大可输出电流2400A Current output: four channels Single channel maximum current 600A Maximum output current 2400A
	功率循环测试 (秒级) PC /sec	评估器件在重复热应力下的可靠性和寿命。(秒级) Evaluate the reliability and lifespan of the device in condition of repeated thermal stress. (Second-level)	IEC 60749-34	设备输出:四通道 单通道最大电流600A 最大可输出电流1800A Current output: four channels Single channel maximum current 600A Maximum output current 1800A

失效分析实验室 Failure Analysis Laboratory

失效分析是为确定和分析失效器件的失效模式、失效机理、失效原因和失效性质而对产品所做的分析和检查。

Failure analysis is the analysis and inspection of a product to determine and analyze the failure mode, failure mechanism, failure cause, and failure property for failed devices.

拥有经验丰富的专业实验团队，高效的失效分析能力。精湛的样品制备技术，如切片分析+离子束研磨等。

Experienced professional experimental team, efficient failure analysis ability.
Excellent sample preparation techniques, such as Cross Section Polisher + ion beam grinding, etc.

独立失效分析实验室，具备各类专业仪器设备，实验规范及制度完善，贯穿产品生命周期的各个环节。可对材料表面和剖面、材料内部及材料半成品进行微区或其成份元素的全面分析。

Independent failure analysis laboratory, with all kinds of professional instruments and equipments, experimental standards and perfect system, throughout all aspects of the product life cycle. The surface and profile of the material, the interior of the material and the semi-finished product of the material can be fully analyzed in microregion or their component elements.

系统级测试平台，以全覆盖测试方式，对设计研发、生产和应用过程中的失效问题进行精细化分析，可快速有效找到失效具体位置、失效原因及预防措施，满足用户对高品质高可靠性产品要求。

System-level test platform, with full coverage test method, fine analysis of failure problems during the R&D, production and application process, can quickly and effectively find the failure specific location, failure causes and preventive measures to meet customers' requirements for high-quality and reliable products.

SEM/EDX

SEM景深大、分辨率高，放大倍率可达到数十万倍以上，可用来观察样品表面及剖面微结构；另配备EDS，可对样品表面同时进行微区之材料分析，包括定性、半定量之成分分析以及特定区域之Point、Line Scan、Mapping分析。

SEM has a large depth of field, high resolution, and a magnification of hundreds of thousands of times or more, which can be used to observe the surface and profile microstructure of samples; Equipped with EDS, it can simultaneously perform micro area material analysis on the surface of the sample, including qualitative and semi quantitative component analysis, as well as point, line scan, and mapping analysis for specific areas.

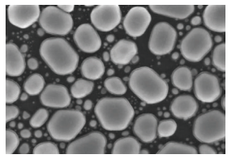

金颗粒的高解析影像
High resolution images of gold particles

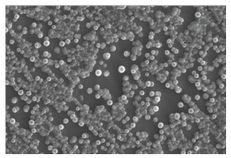

铜颗粒的高解析影像
High resolution images of copper particles

2D X-ray

2D X-ray检测，是当前非破坏检测产品内部缺陷分析有效率且快速的方法，X-ray可检测待测物内部结构及是否有缺陷、空洞(Void)、Crack等异常。

2D X-ray detection is currently an effective and fast method for analyzing internal defects in non-destructive testing products. X-ray can detect the internal structure of the tested object and whether there are defects, voids, cracks, and other abnormalities.

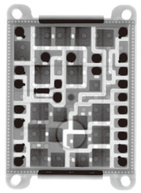

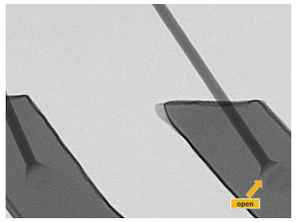

离子束研磨 Cross Section Polisher (CP)

离子束剖面研磨、离子束截面研磨(Cross Section Polisher, 简称CP)，是利用离子束切割方式，去切削出样品的剖面，不同于一般样品剖面研磨，离子束切削的方式可避免因研磨过程所产生的应力影响。

Ion beam profile grinding, Cross Section Polisher (referred to as CP), it uses ion beam cutting to cut the profile of a sample. Unlike general sample profile grinding, ion beam cutting can avoid stress effects caused by the grinding process.

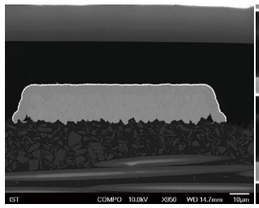

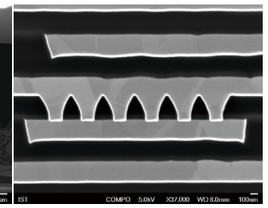

双眼显微镜 Optical Microscope (OM)

透过光学的透镜放大、缩小及CCD来撷摄取影像，进行表面形貌观察。

Using optical lenses for magnification, reduction, and CCD to capture images and observe surface morphology.

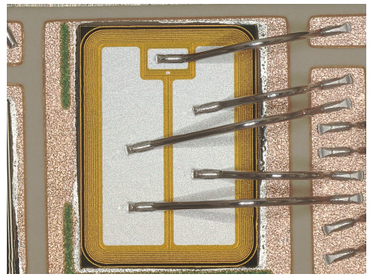

SAT 超声波扫描

SAT超声波可用来检测芯片组件内部不同位置的脱层(Delamination)、裂缝(Crack)、气洞及粘着状况，多用于检察芯片封胶内的缺陷。

SAT ultrasound can be used to detect delamination, cracks, air holes, and adhesion at different positions inside chip components, and is often used to inspect defects inside chip seals.

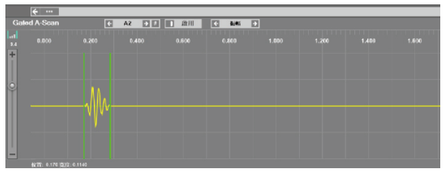

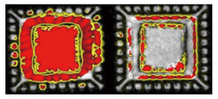

切片分析 PCBA (X-section)

快速的样品制备方式之一，利用砂纸或钻石砂纸，加上后续的抛光，可处理出清晰的样品表面。

One of the fast sample preparation methods is to use sandpaper or diamond sandpaper, combined with subsequent polishing, to produce a clear sample surface.

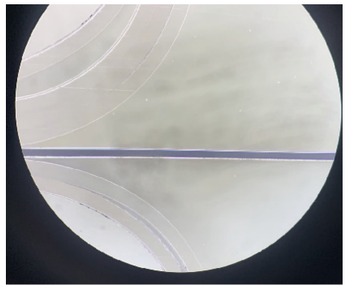

红药水渗透 Red Medicine Penetration Test

利用液体具有渗透的特性，可以渗透到所有的焊锡缝隙来判断焊接是否完好。

By utilizing the permeability of liquids, it can penetrate all solder gaps to determine the integrity of the welding process.

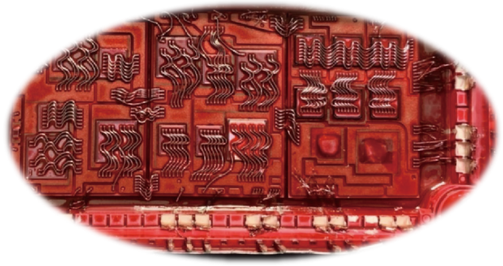

弹坑试验 Crater Test

芯片失效分析时，需分析内部的芯片、打线、组件，因封装胶体阻挡观察，利用「laser蚀刻」及「湿式蚀刻」两种搭配使用，使封装体内包覆的对象裸露出来，以便后续相关实验处理、观察。

It is necessary to analyze the internal chips, wiring, and components during chip failure analysis. Due to the obstruction of the packaging colloid, two combinations of "laser etching" and "wet etching" are used to expose the objects inside the packaging for subsequent experimental processing and observation.

弹坑前

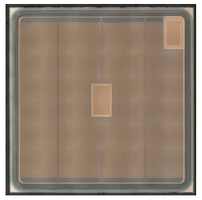

弹坑后

BRAND
CULTURE
品牌文化

战略目标 STRATEGIC GOAL

致力于实现对国外高端进口功率模块产品国产化

We are committed to realizing the localization of high-end power module products imported from foreign countries.

愿景 VISION

从“芯”出发 改变世界

Changing the world starts from the chips!

使命 MISSION

智造赋能“芯”未来

Empower the future of “chip” based on smart manufacturing.

价值观 VALUES

知常明变 守正创新
协同互信 精业笃行

Knowledgeable Flexible Integrity Innovation
Collaborative Mutual trust Diligent Dedicated

经营理念 BUSINESS PHILOSOPHY

功“芯”兴国
功率之芯，兴盛国家

Achieving national prosperity with powerful “chip”.
Making the country prosperous with powerful chips.

创“芯”引领
创新之芯，技术领先

Leading the technology with innovative “chip”.
Achieving technological leadership with innovative chips.

效“芯”双益
效能之芯，双赢益彩

Making mutual benefits with efficient “chip”.
Achieving win-win with efficient chips.

初“芯”共进
初心之芯，同心共进

Making progress together with original intention.
Developing together with the original intention in mind.

LIONSGATE SEMI

上海狮门半导体有限公司
Shanghai Lionsgate Semiconductor Co., Ltd.

+86-021-57866090

www.lionsgateigbt.com

上海市松江区新波路517弄8号 201600
No.8, Lane 517 Xinbo Rd., Songjiang, Shanghai, 201600, China